Ecostat E
Ecostat E thermostatic mixer highflow 59 l/ min for concealed installation
Surfaces: **chrome** Article Number: **15706000**

Description

product features
- thermostat cartridge
- safety lock at 40° C
- temperature limitation adjustable
- flow rate: 59 l/min
- scope of supply: handle, sleeve, mixing unit, escutcheon
- ACS 13 ACC LY 756

Mandatory Accessoires
- Basic set iBox universal (#01800XXX)

Optional Accessoires
- iControl shut-off/ diverter valve for concealed installation for 3 functions (#15777XXX)
- Extension element (#15597XXX)
- iBox universal basic set extension 25 mm (#13595XXX)

Product image

Scale drawing

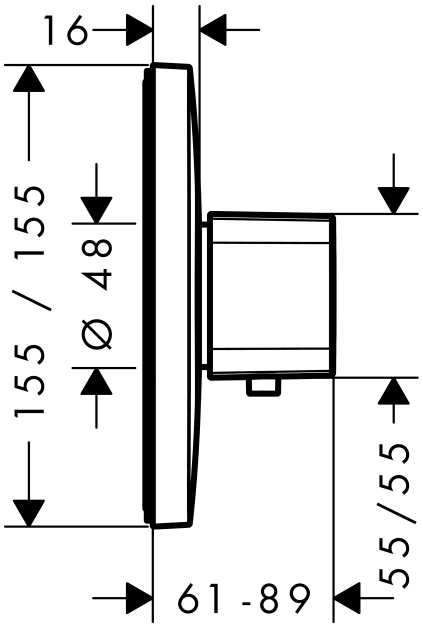

Ecostat E
Ecostat E thermostatic mixer highflow 59 l/ min for concealed installation
Surfaces: **chrome** Article Number: **15706000**

Flowchart

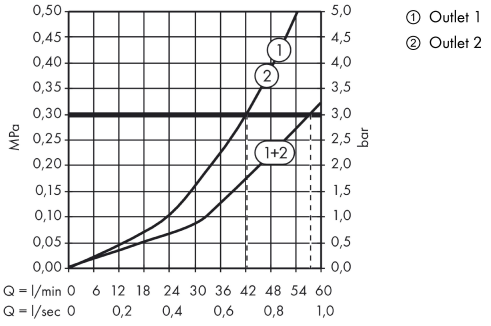

Ecostat E
Ecostat E thermostatic mixer highflow 59 l/ min for concealed installation
Surfaces: **chrome** Article Number: **15706000**

Exploded Drawing

Year of production: **>05/14**

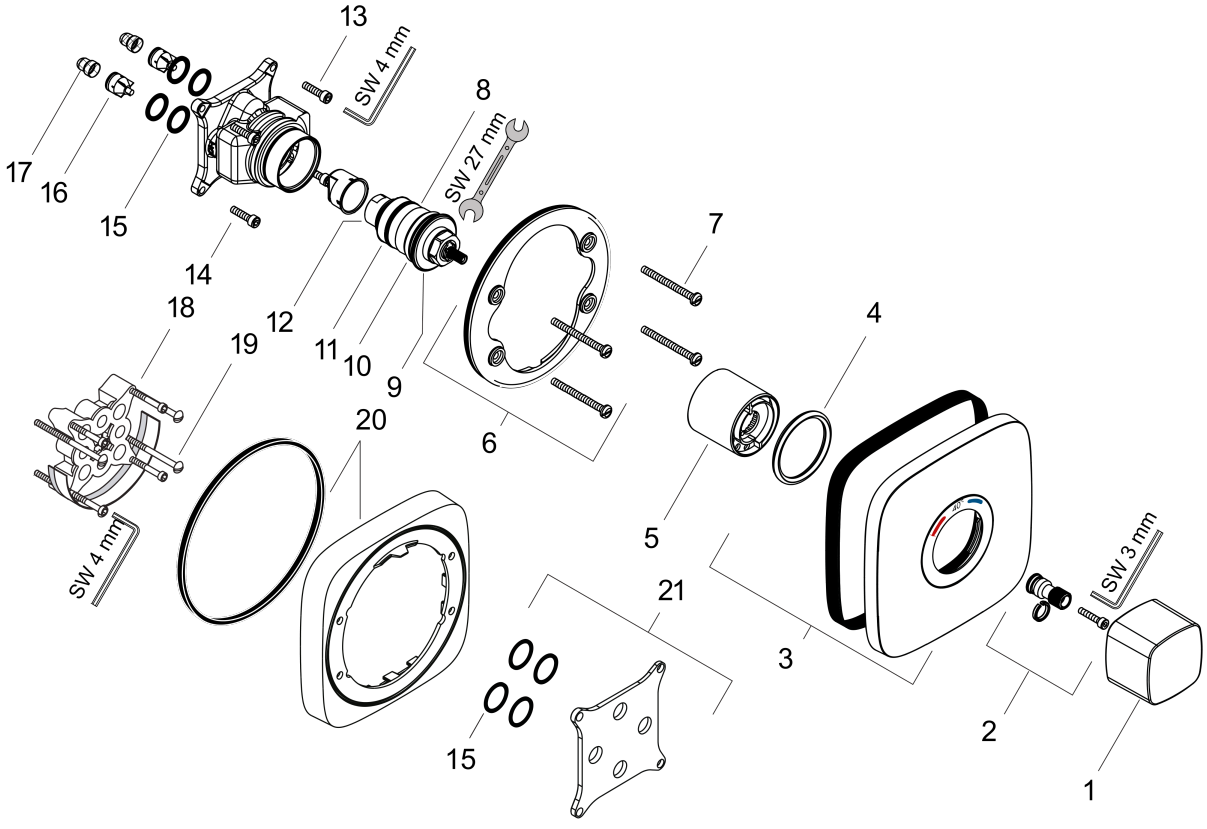

Ecostat E
Ecostat E thermostatic mixer highflow 59 l/ min for concealed installation
Surfaces: **chrome** Article Number: **15706000**

Spare part list

Year of production: **>05/14**

Pos.	Description	Article Number	PC	PU
1	handle for thermostat	95906000	13	1
2	adapter for handle	96435000	6	1
3	escutcheon 155 / 155 mm	92277000	15	1
4	O-ring 48x5	98174000	1	1
5	sleeve	92276000	8	1
6	holder for escutcheon	98793000	9	1
7	set of fixing screws	96454000	3	1
8	thermostat cartridge	96633000	15	1
9	O-ring 43x1,5	98148000	1	1
10	sealing set	96636000	10	1
11	O-ring 38x2,5	98198000	2	1
12	O-ring 34x2	98383000	2	1
13	O-ring 26x2	98147000	1	1
14	screw M5 x 20	96525000	3	1
15	O-ring 16x2	98133000	1	1
16	set of non return valves DW 15	97350000	6	1
17	filter	98513000	1	1
18	extension 25 mm	13595000	0	1
19	set of fixing screws	97747000	1	1
20	extension 22 mm	15597000	0	1
21	compensation set 1°	95521000	16	1
a	concealed item	01800180	0	1