Axor Urquiola
Single lever basin mixer with pop-up waste set
Surfaces: **chrome** Article Number: **11020000**

Description

product features

- ComfortZone 130
- projection 139 mm
- normal spray
- flow rate: 5 l/min
- ceramic cartridge
- temperature limitation adjustable
- pop-up waste set G 1¼
- suitable for continuous flow water heaters
- connection dimension: DN15
- P-IX 19147/IZ
- DVGW NW-6506CL0400
- ETA VA 1.42/18817
- ACS 12 ACC LY 352
- ACS 12 ACC LY 352
- WRAS 1112038
- Kiwa K6161/15
- SVGW 1003-5701

Optional Accessoires

- Flowstar design trap set (#52120XXX)

Technology

Product image

Scale drawing

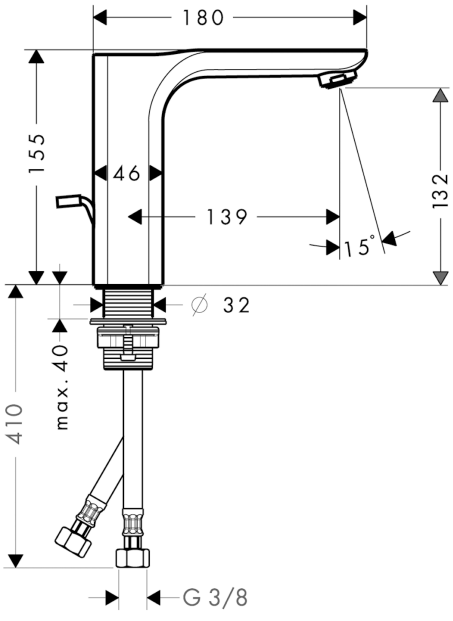

Axor Urquiola
Single lever basin mixer with pop-up waste set
Surfaces: **chrome** Article Number: **11020000**

Flowchart

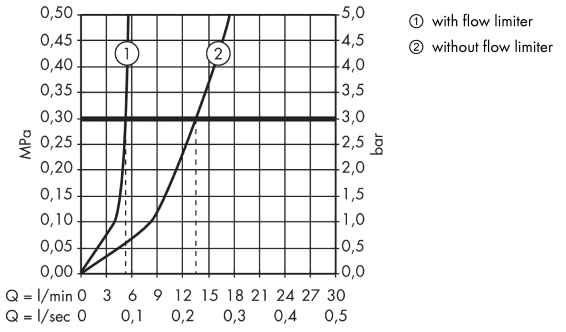

Axor Urquiola
Single lever basin mixer with pop-up waste set
Surfaces: **chrome** Article Number: **11020000**

Exploded Drawing

Year of production: **>10/10**

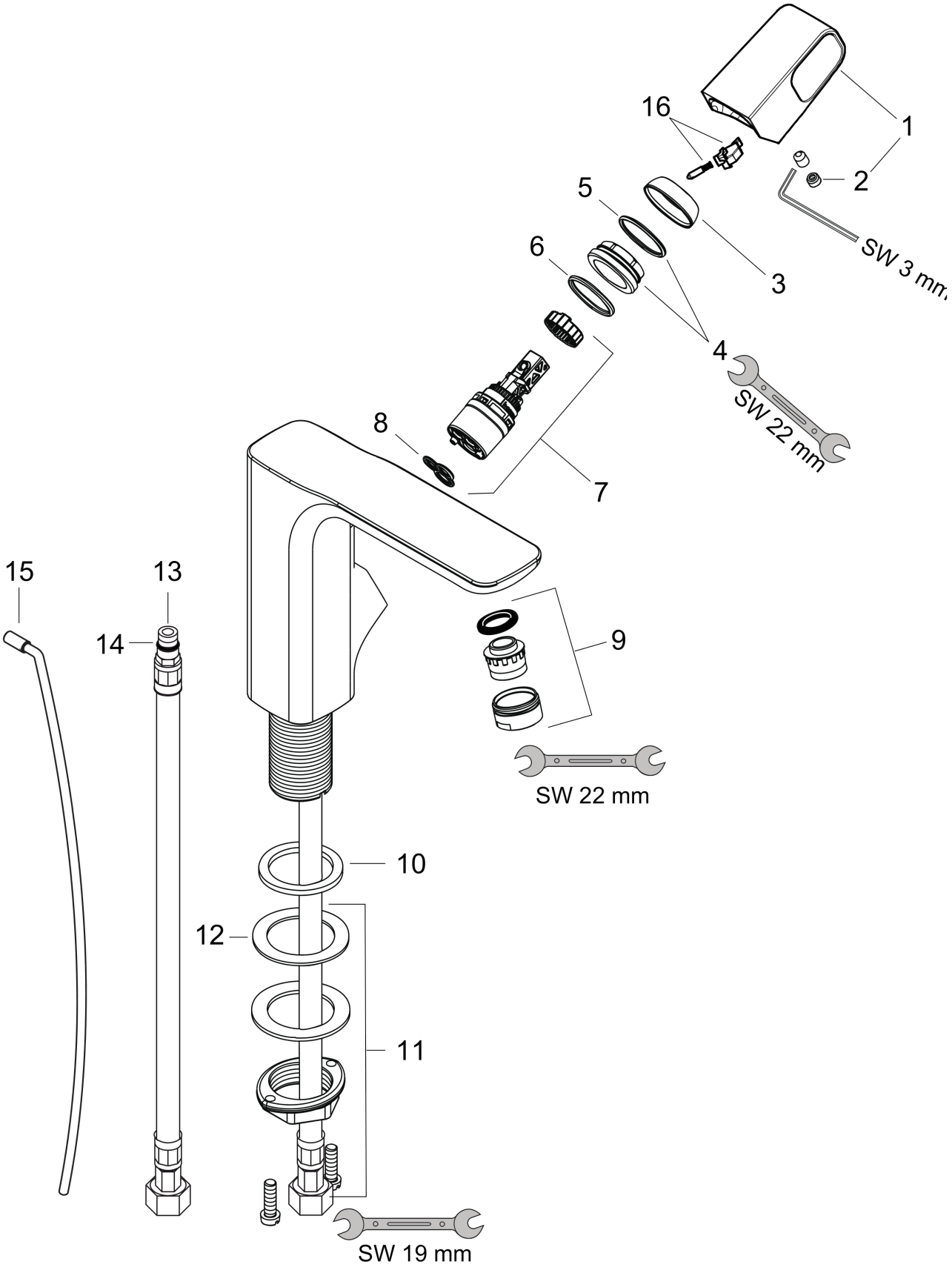

Axor Urquiola
Single lever basin mixer with pop-up waste set
Surfaces: **chrome** Article Number: **11020000**

Spare part list

Year of production: **>10/10**

Pos.	Description	Article Number	PC	PU
1	handle	11093000	16	1
2	screw cover	96762000	1	1
3	flange	98863000	10	1
4	nut	95178000	9	1
5	O-Ring 22x2	98185000	1	1
6	O-ring 25x2	98389000	1	1
7	cartridge, assy	97685000	11	1
8	seal	98865000	8	1
9	aerator M24x1 (5 l/min)	13185000	0	1
10	flat seal	98749000	2	1
11	fixing set	13961000	7	1
12	lever collar	97548000	1	1
13	connection hose 450 mm M8x0,75 G3/8	97206000	8	1
14	O-ring 7x1,5	98422000	1	1
15	pull rod	96923000	8	1
16	spring with sleeve	92462000	3	1
a	fixation extension 35 mm	13898000	12	1