Axor ShowerCollection
Flood spout for concealed installation 24 x 12
Surfaces: **chrome** Article Number: **10942000**

Description

product features

- projection 180 mm
- when positioning the spout between waterconducting parts (no.10751000, no.10755000, no.10972000, no.10651000, no.28491000, no.40872000, no.40873000) in joined installation (10 mm distance) it is recommended to use basic set no.10941180
- can be used as bath spout or flood shower
- flow rate: 24 l/min
- connection dimension: device connection DN20
- spray type: wide flood jet
- WRAS 1305012

Optional Accessoires

- Basic set for flood spout for concealed installation 24 x 12 (#10941XXX)

Technology

Quick Clean

Product image

Scale drawing

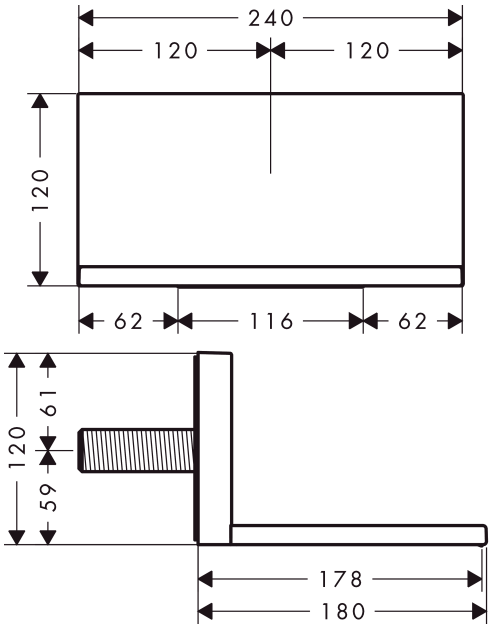

Axor ShowerCollection
Flood spout for concealed installation 24 x 12
Surfaces: **chrome** Article Number: **10942000**

Exploded Drawing

Year of production: **>11/11**

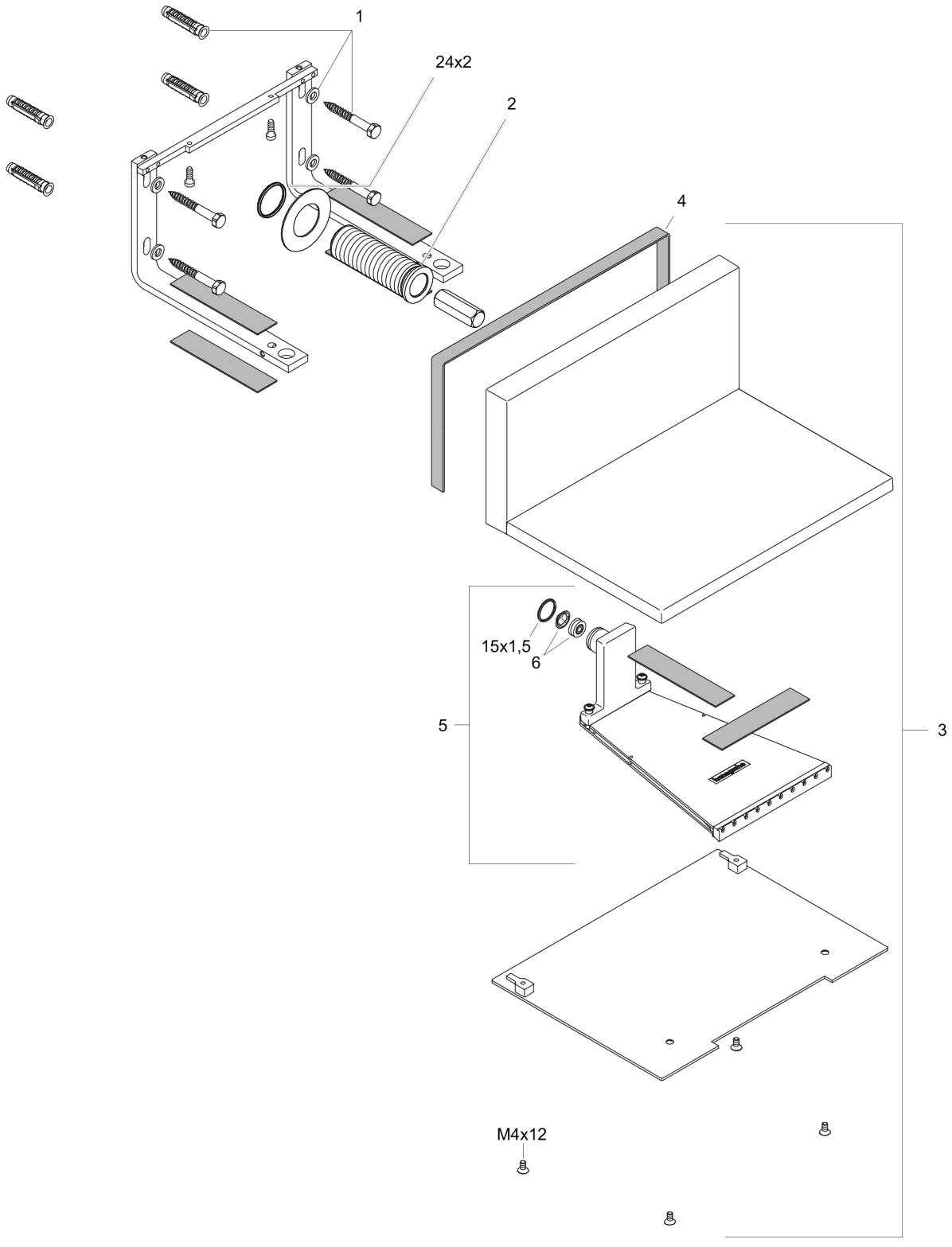

Axor ShowerCollection
Flood spout for concealed installation 24 x 12
Surfaces: **chrome** Article Number: **10942000**

Spare part list

Year of production: **>11/11**

Pos.	Description	Article Number	PC	PU
1	mounting kit	95430000	9	1
2	connecting thread	95886000	14	1
3	spout cpl.	95882000	22	1
4	seal	95885000	4	1
5	spray former	95883000	17	1
6	flow limiter (22 l/min)	95884000	4	1